10 Watt Single Output AC-DC Miniature Encapsulated Type Module

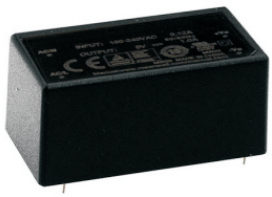

FEATURES

- No load power comsumption < 0.075W
- Miniature size, high power density
- Universal AC input / Full range
- Protection: Short circuit / OLP / OVP
- Cooling by free air convection
- Isolation Class II
- Comply with EN55032 class B w/o any additional components
- Fully isolated plastic case
- Withstand 5G vibration test
- Low cost, high relibility, pass LPS
- 3 years warranty

SPECIFICATIONS

Input Voltage.....85～264VAC;120～370VDC
Overload protection.....115%~190%
Over voltage protection..... 115%~135% rated output voltage
Withstand voltage..... I/P-O/P: 3kVDC;
Operating Temperature ..... -30℃ to +70℃
Safety Standard meets.....UL62368-1; EN62638-1
EMC Standard..... EN55032 Class B, EN61000-3-2,3,
EN61000-4-2, 3, 4, 5, 6, 8, 11
Dimension (LxWxH) ..... 45.7 x 25.4 x 21.5 mm

Model Number	Output Voltage (VDC)	Output Current (A)	Voltage Tolerance	R & N	EFF. %
xxM010-S03-P	3.3	0～2.50	±2.5%	200mV	74
xxM010-S05-P	5.0	0～2.00	±2.5%	200mV	77
xxM010-S12-P	12.0	0～0.85	±2.5%	200mV	82
xxM010-S15-P	15.0	0～0.67	±2.5%	200mV	82
xxM010-S24-P	24.0	0～0.42	±2.5%	200mV	82

Remark: P = PCB mounting style

1-5 pcs Samples
500pcs Moq (Min Order Quantity)

MECHANICAL DRAWING (Unit: mm)

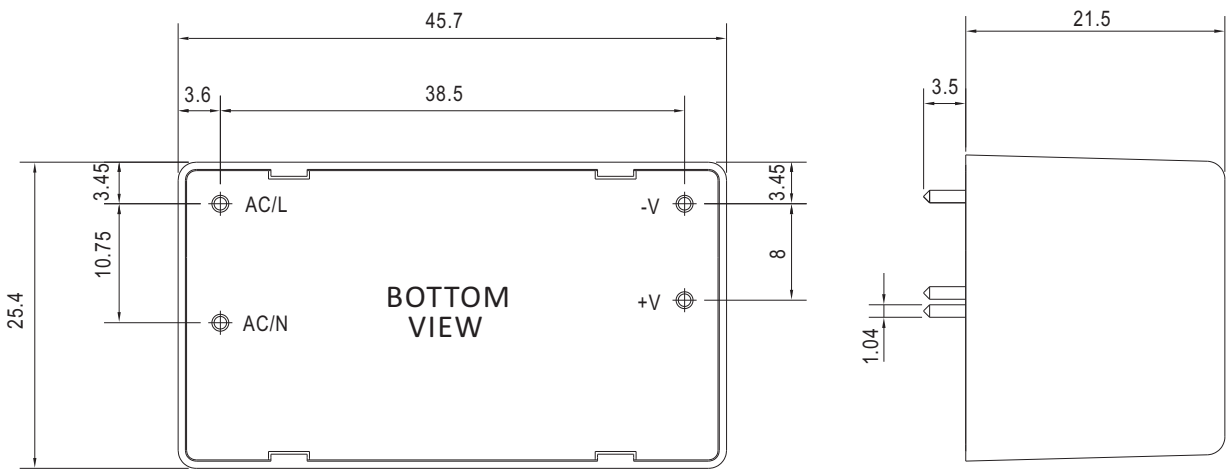

TS Connect AB / Power Outlet
Fagerstagatan 9
163 53 Spånga
Sweden

Mail: sales@power-outlet.com
Phone: +46 8 795 93 10
Web: www.power-outlet.com